Bestückung und Verdrahtung GT-2 Board

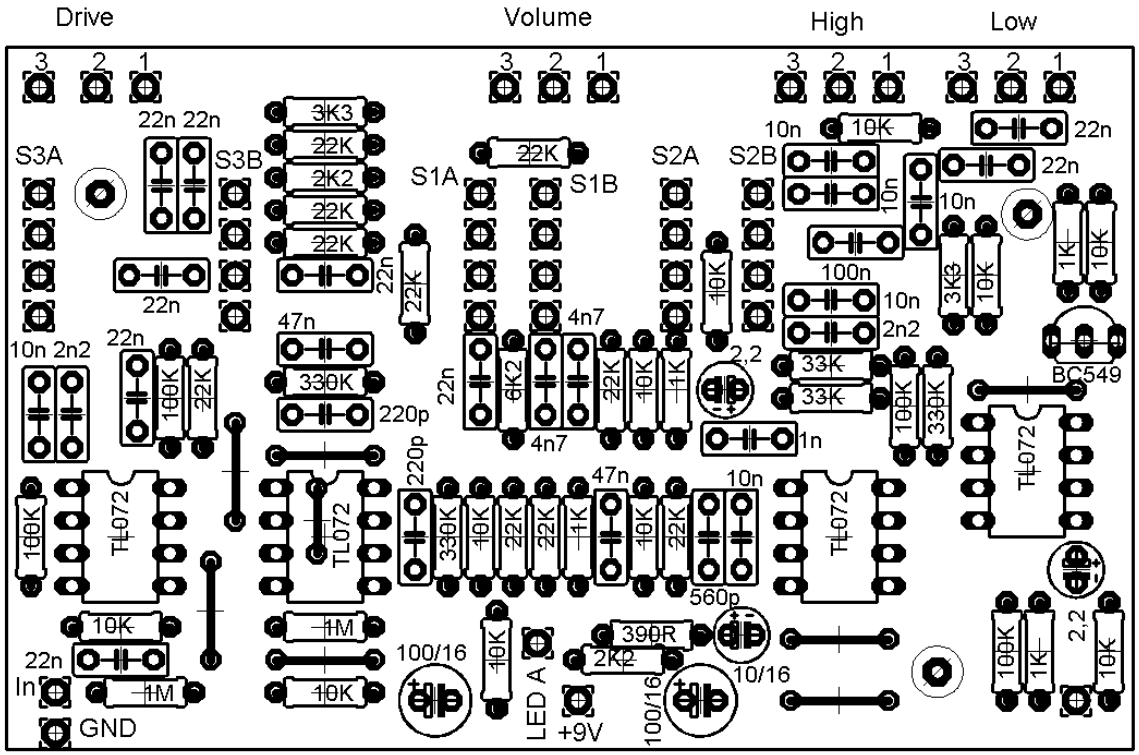

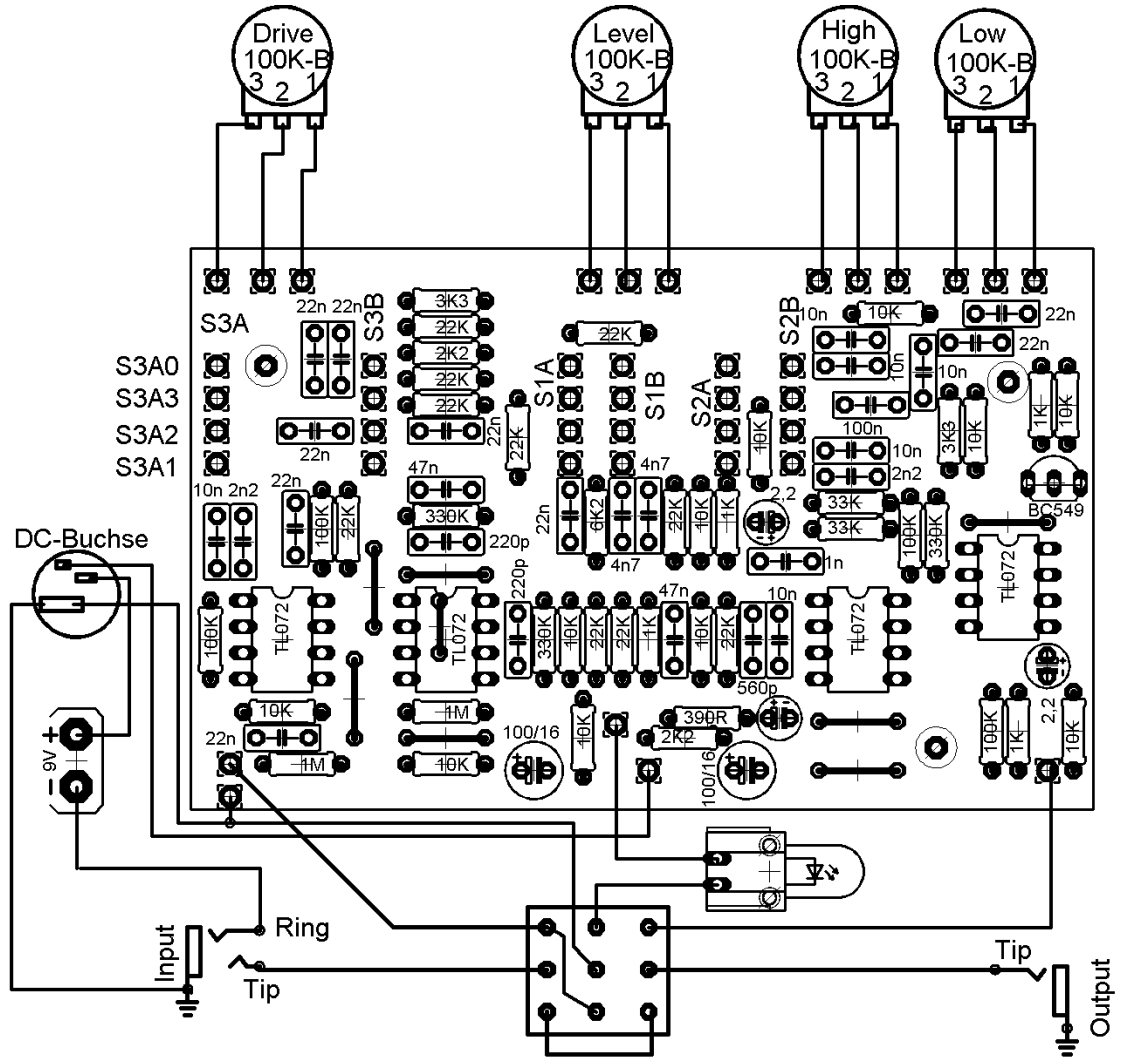

Switch Settings

S1 = MIC	S2 = MOD	S3 = AMP
1 - Off Axis	1 - Hot Wired	1 - California
2 - Center	2 - Hi Gain	2 - British
3 - Classic	3 - Clean	3 - Tweed

Switch Wiring Example

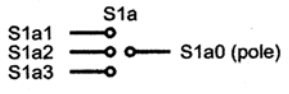

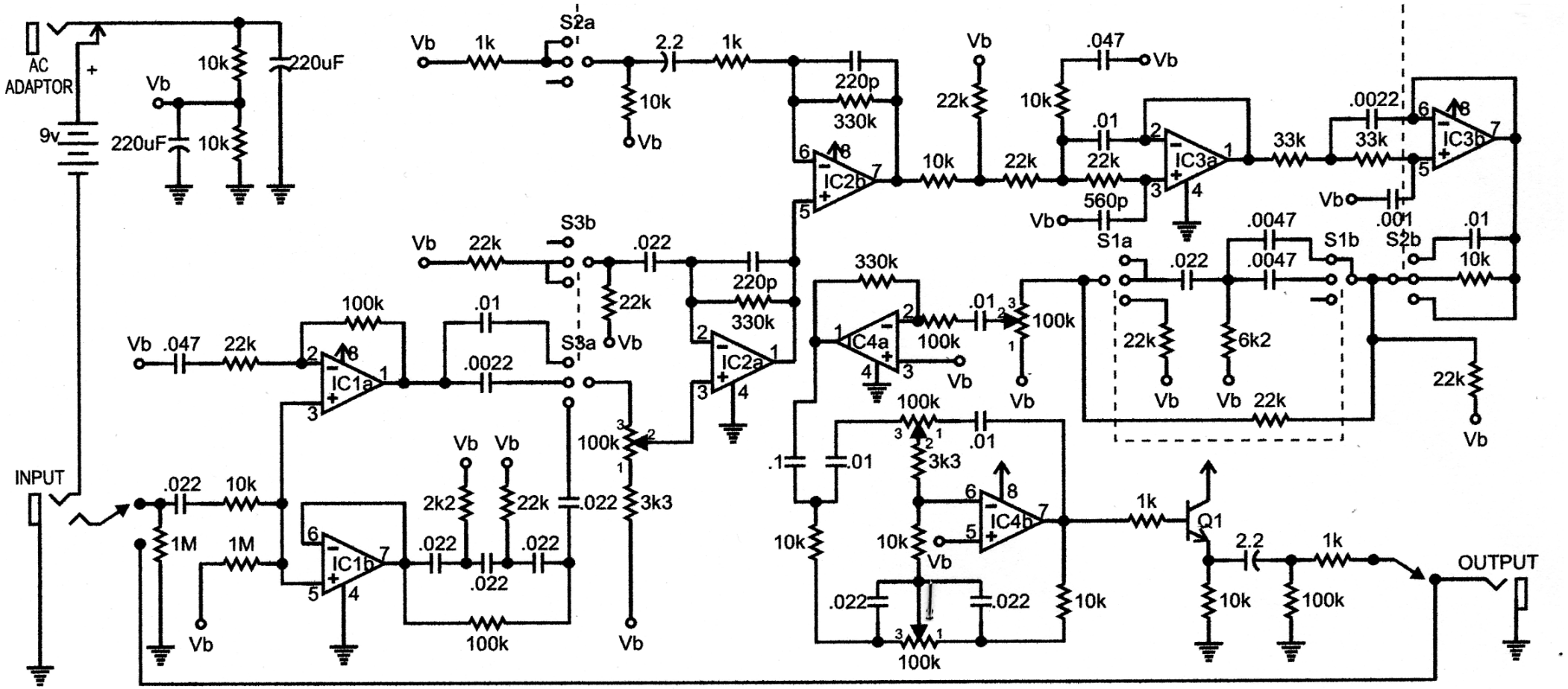
AC ADAPTOR
9v
Vb
10k
220uF
220uF
10k
INPUT
.022
10k
1M
1M
Vb
IC1a
IC1b
100k
.01
.0022
.022
2k2
22k
.022
.022
.022
100k
Vb
Vb
.047
22k
S3b
S3a
22k
Vb
100k
3k3
Vb
S2a
Vb
1k
2.2
1k
10k
Vb
220p
330k
IC2b
IC2a
10k
22k
330k
IC4a
100k
Vb
.01
100k
Vb
100k
.01
3k3
IC4b
.1
.01
10k
10k
Vb
.022
.022
100k
10k
Vb
.047
10k
.01
22k
IC3a
560p
S1a
.0022
33k
33k
IC3b
.001
.0047
S1b
.022
.0047
22k
6k2
Vb
Vb
22k
S2b
.01
10k
22k
Vb
1k
Q1
2.2
1k
10k
100k
OUTPUT